University of Ferrara

BREVETTI UNIFE

Energy and Environment

THERMAL BARRIER FOR VENTILATED ROOFS

Thermal barrier | Discontinuous roof covering | Phase change materials (PCM) | Ventilated roof



OBIETTIVI PER LO SVILUPPO SOSTENIBILE

7 ENERGIA PULITA E ACCESSIBILE

9 IMPRESE, INNOVAZIONE E INFRASTRUTTURE

11 CITTÀ E COMUNITÀ SOSTENIBILI

13 LOTTA CONTRO IL CAMBIAMENTO CLIMATICO

TARGET MARKETS

- Building sector
- HVAC (Heating, Ventilation and Air Conditioning)

PATENT OWNER: University of Ferrara
GEOGRAPHICAL EXTENSION: EU, USA
APPLICATION NUMBER: 102022000017301
FILING DATE: 12/08/2022

The invention consists in the installation of containers filled with phase change materials (PCM) in ventilated roof coverings in order to improve their summer energy performance, reducing the solar gain through the envelope and therefore the energy required for cooling.

TECHNICAL FEATURES

The containers are filled with PCM which, subject to specific thermal shocks, is able to change phase, switching between the liquid and the solid state. During melting, also known as “charge”, the PCM stores large amounts of energy which is then released during solidification, also known as “discharge”, whilst keeping its temperature almost unchanged throughout both phase changes. The application of such materials within the air gap of ventilated roofs reduces the amount of heat entering the building during the day, as part of the energy is stored by the PCM during melting. At night, thanks to ventilation of cooler air inside the gap, the stored energy is released, causing the solidification of the PCM and therefore its regeneration.

POSSIBLE APPLICATIONS

A passive cooling technology designed for pitched roofs with discontinuous roof coverings, typical of the Mediterranean region.

Technology applied to:

- Construction sector
- HVAC sector

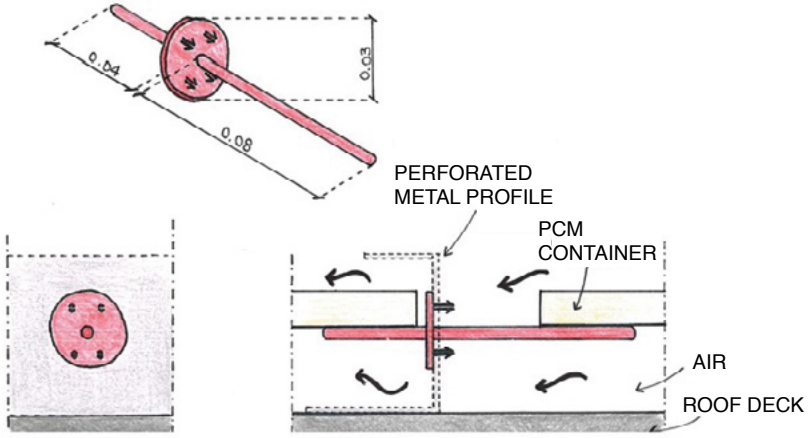

ADVANTAGES

- Improvement of the energy performance of the building envelope;
- Energy saving;
- Greater resilience of the building to foreseeable climate change;
- Easy implementation both in the case of new constructions and in the case of refurbishments of existing buildings.

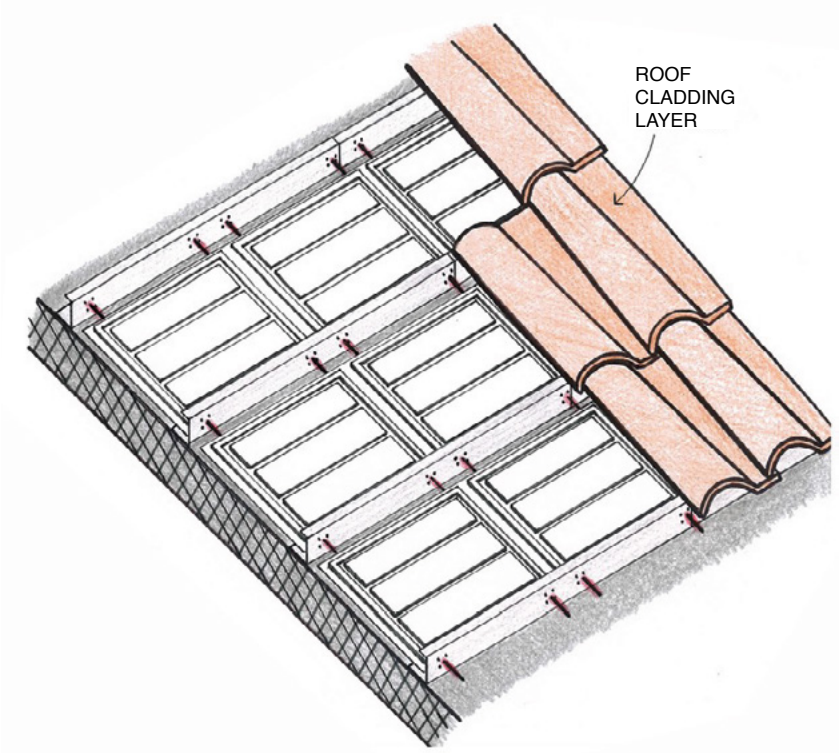

Università degli Studi di Ferrara

Settore
Innovazione tecnologica
e sociale

Via Saragat,1 Corpo B - II piano
44122 Ferrara
Tel 0532/293202
e-mail: utt@unife.it

www.unife.it